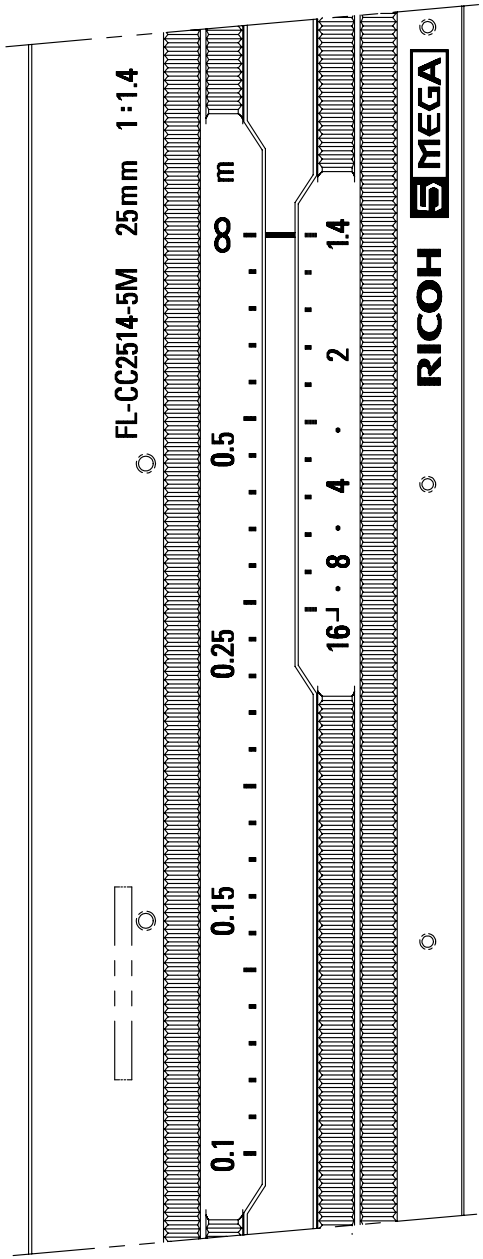

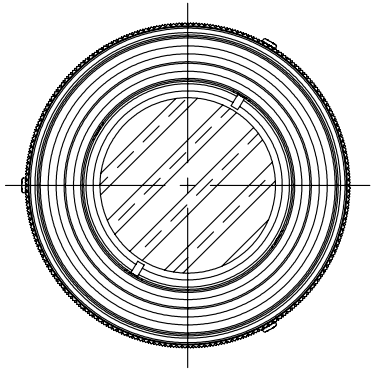

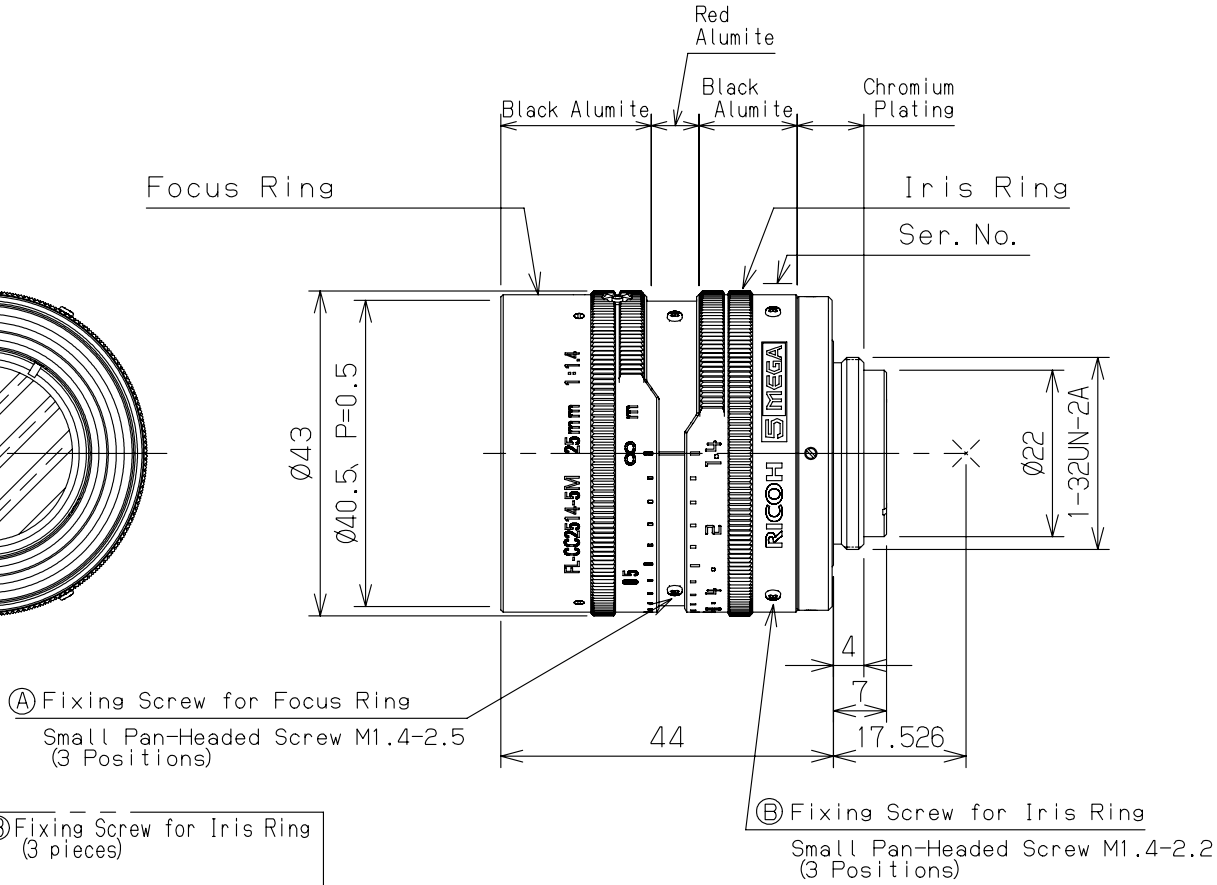

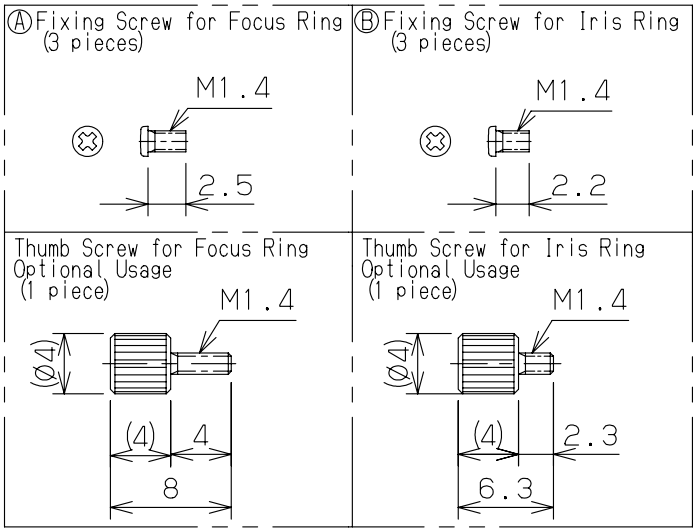

FL-CC2514-5M

SPEC. INFO	3132501-S001-RC-B33
	Oct.09.2012
RICOH	