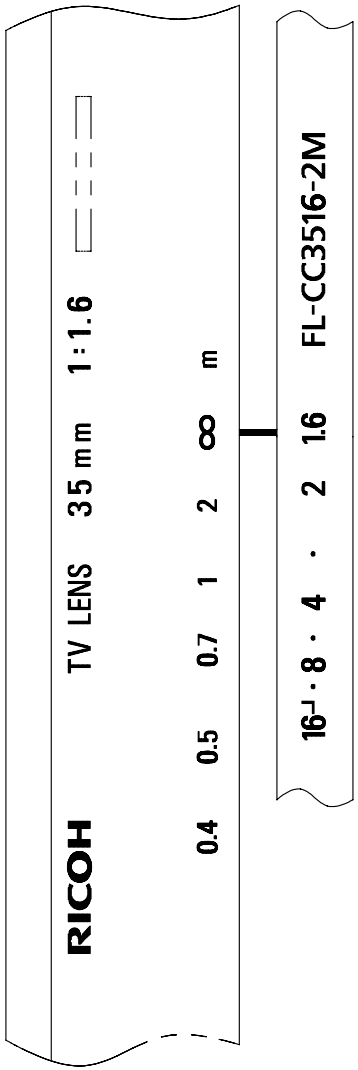

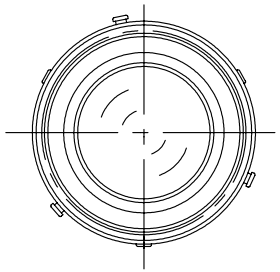

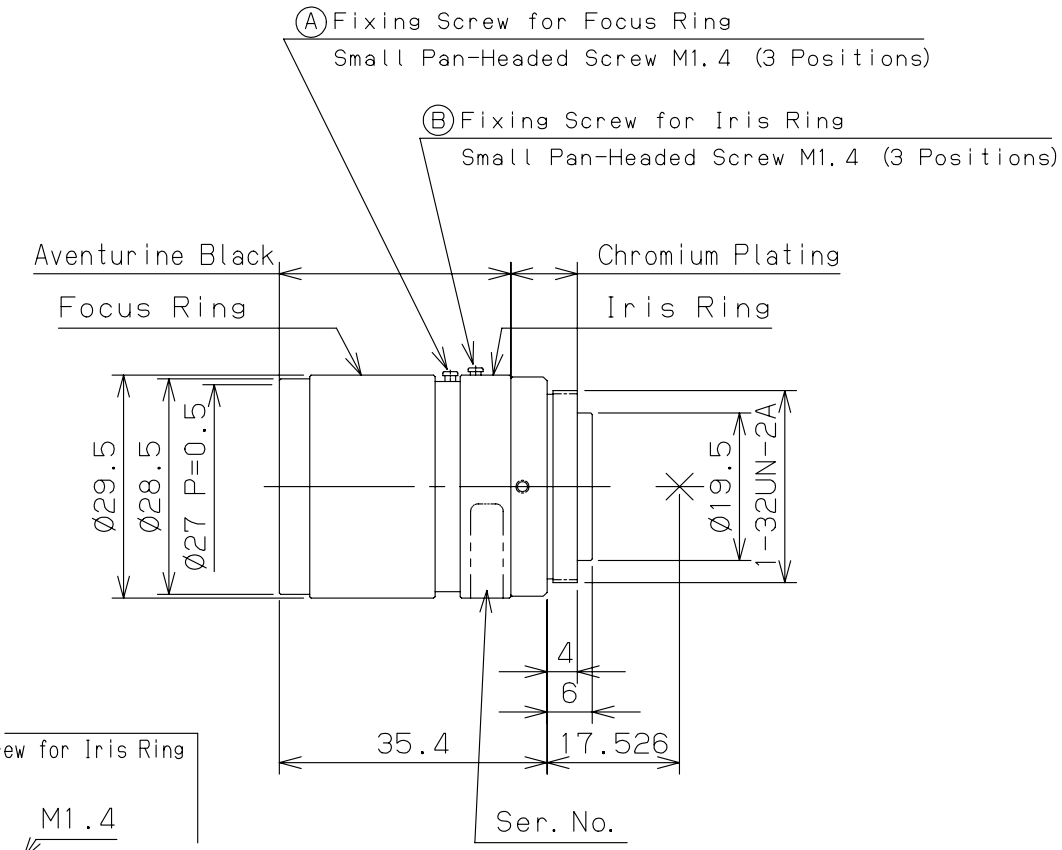

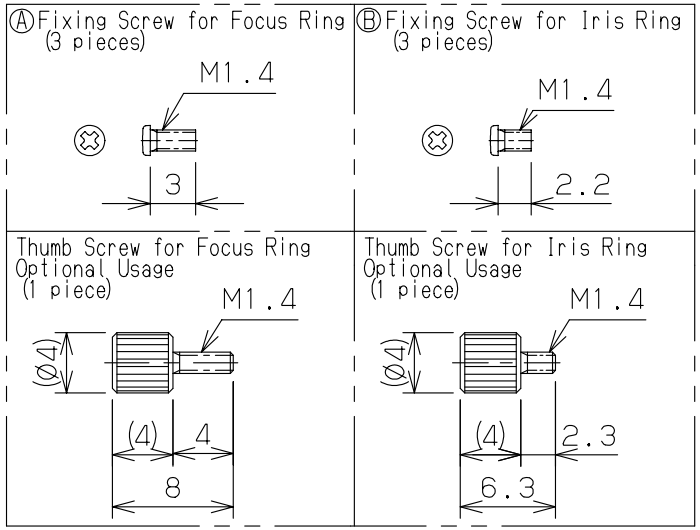

	FL-CC3516-2M
SPEC. INFO	3133500-S001-RC-B33
	Oct.04.2012
RICOH	