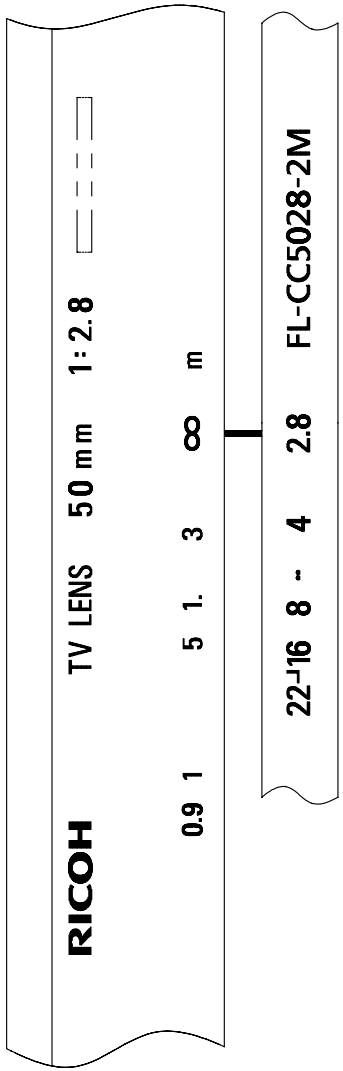

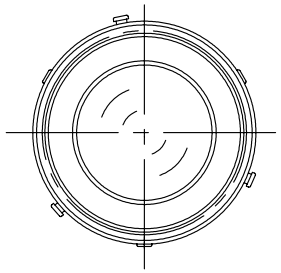

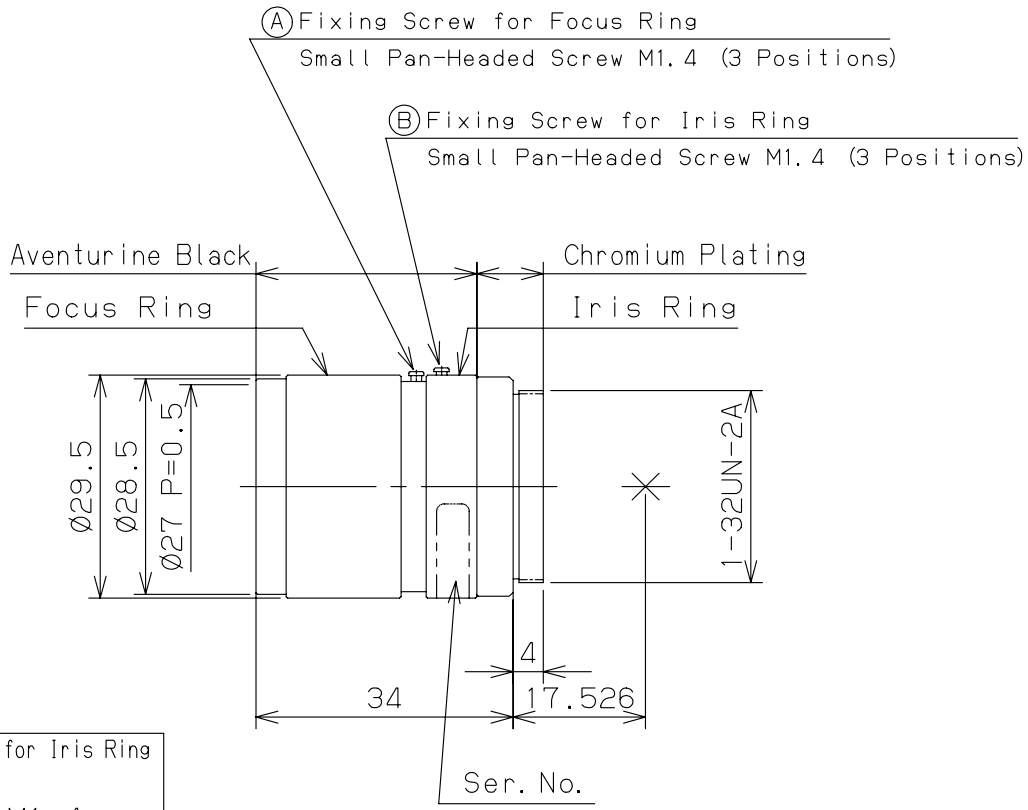

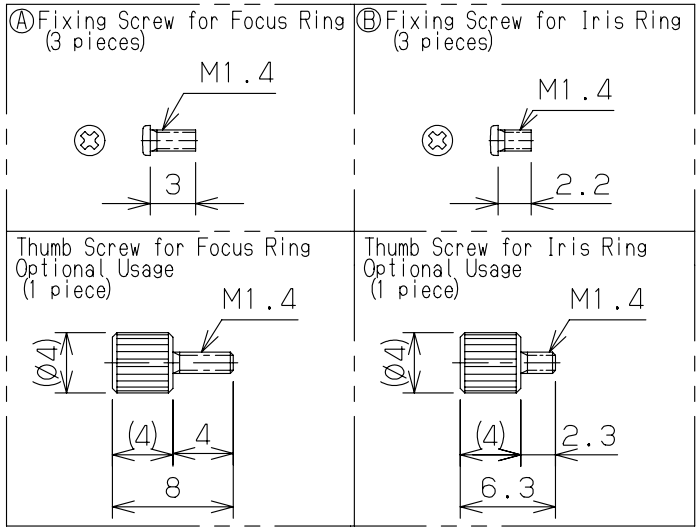

	FL-CC5028-2M
SPEC. INFO	3135001-S001-RC-B33
	Oct.04.2012
RICOH	