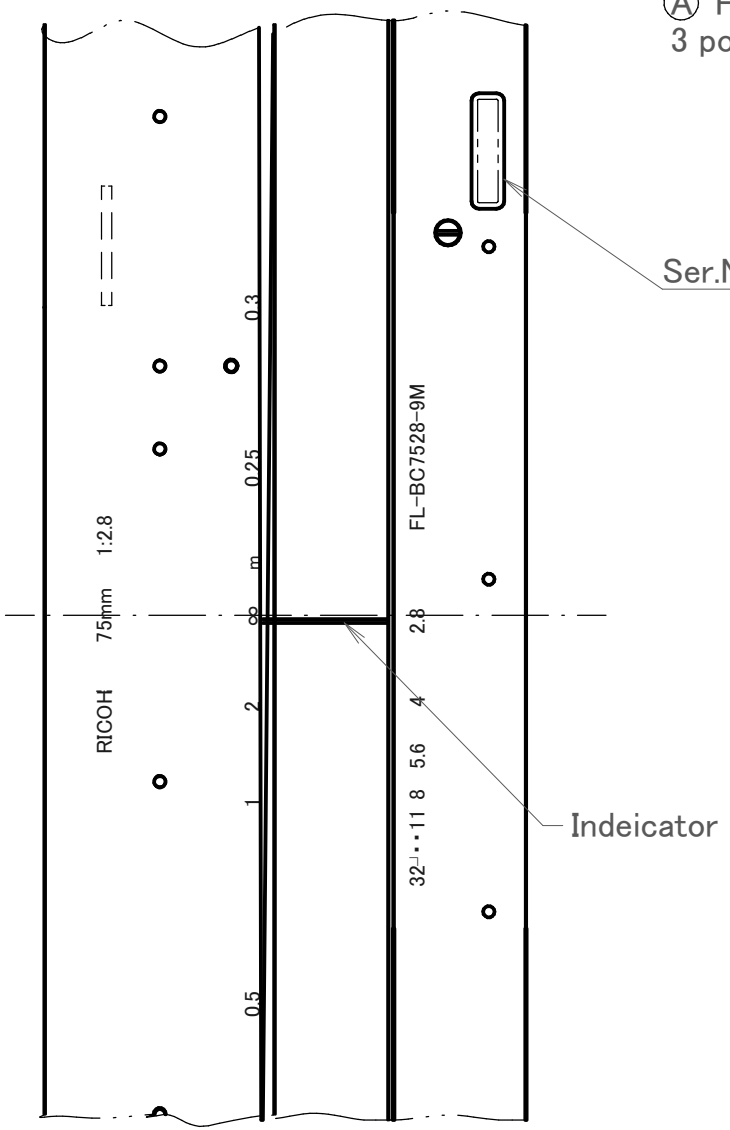

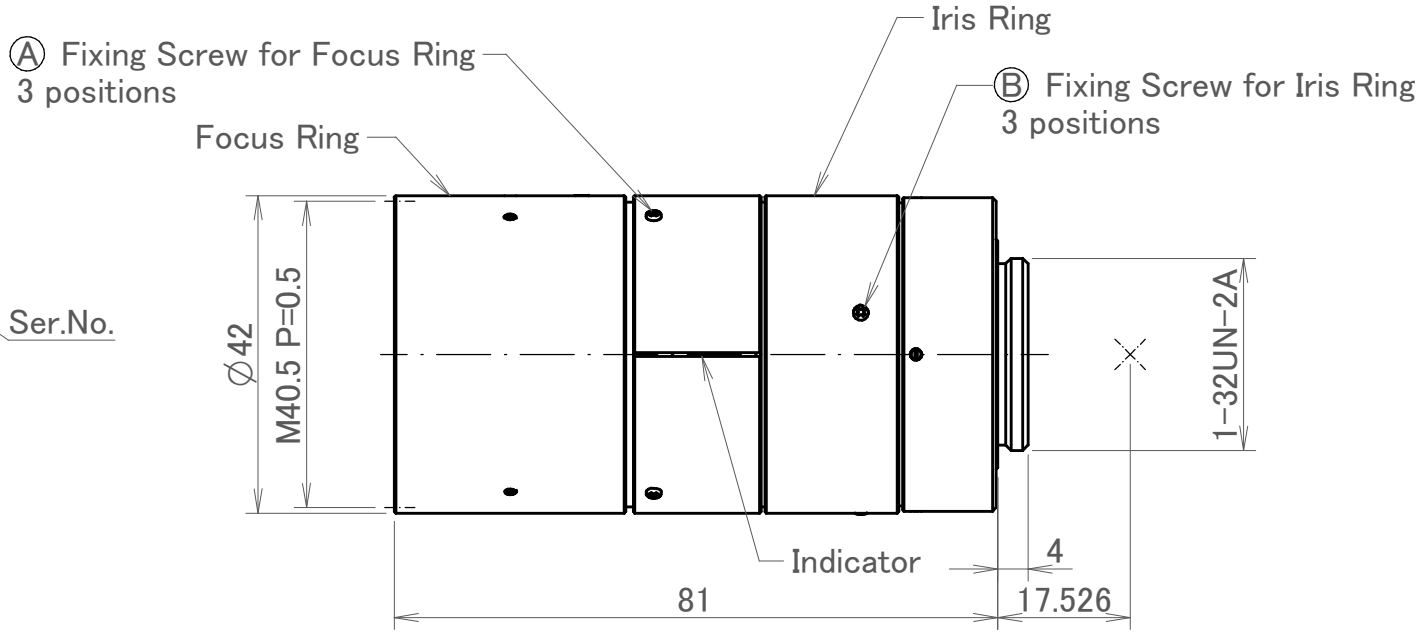

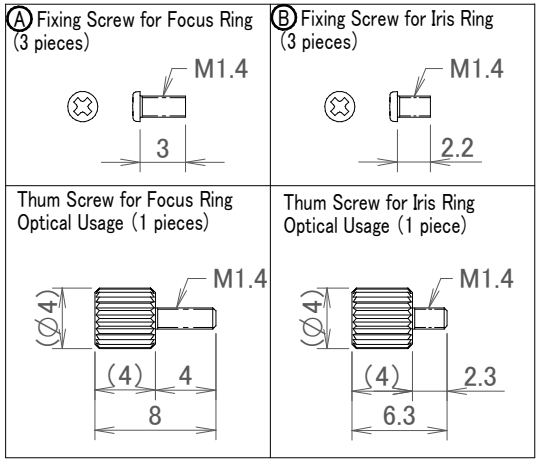

SPEC.INFO	FL-BC7528-9M
	K65784-S001-B33
RICOH Industrial Solutions Inc.	Dec.05.2014