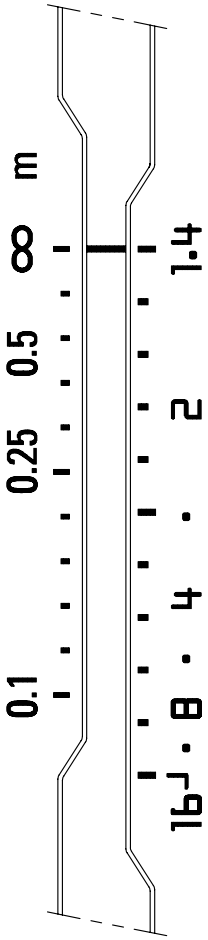

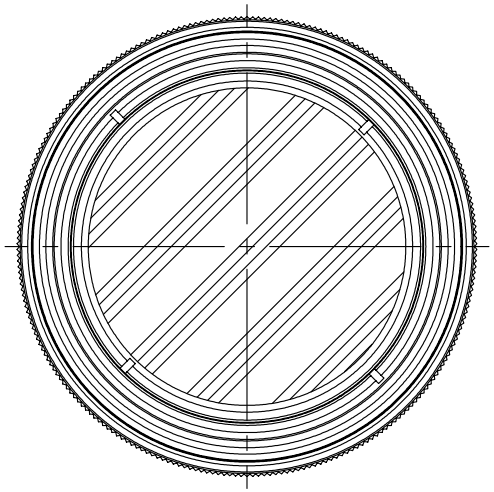

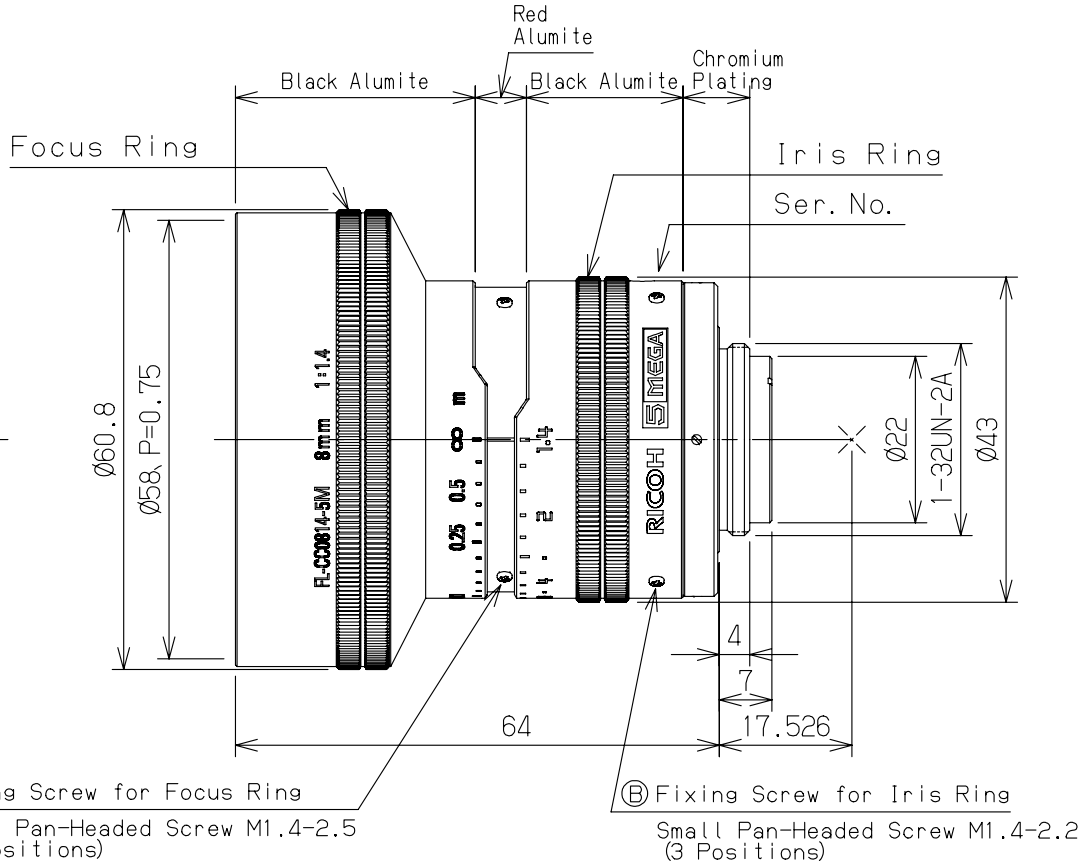

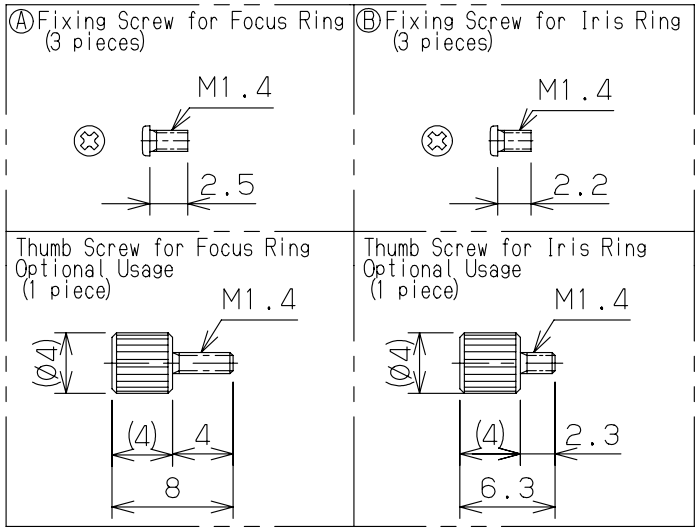

	FL-CC0814-5M
SPEC. INFO	3130823-S001-C-B33
	Oct.09.2012
RICOH	